Circuit for Measuring Motor Coil Frequency

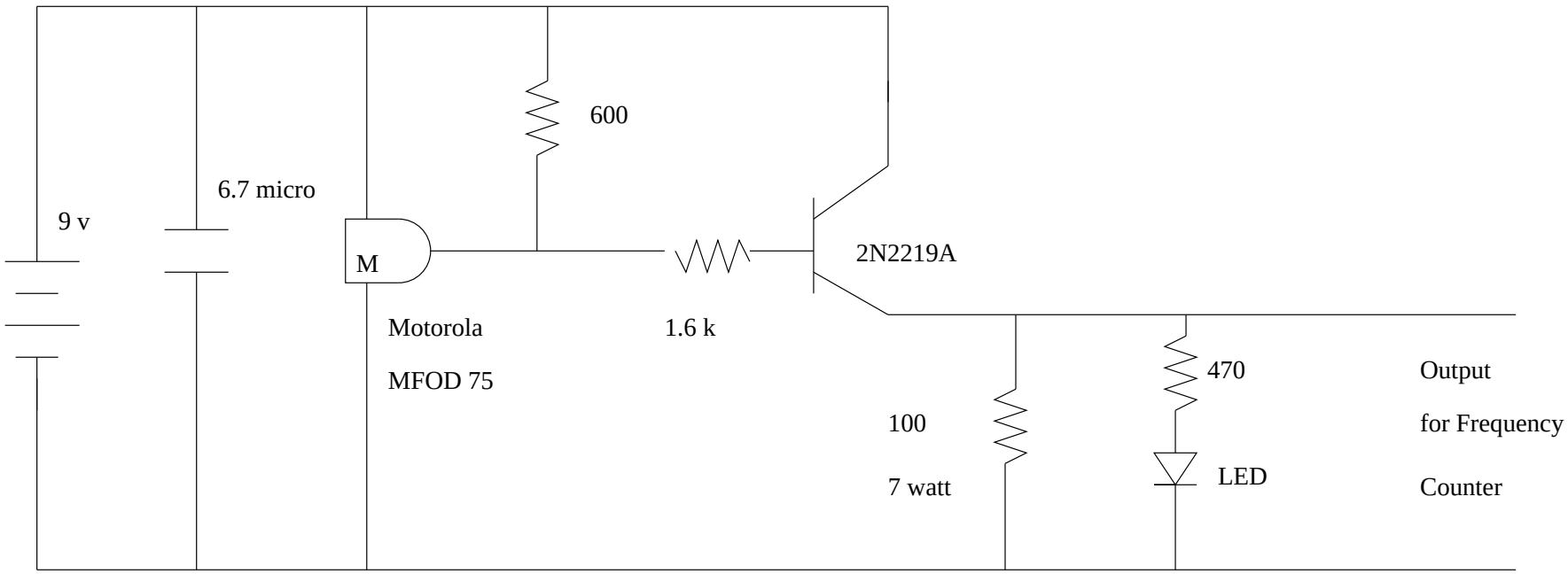

Motorola MFOD75 is a photologic detector used in fiber optics applications

Laser used in experiment is a Radio Shack LX 2000 Laser Pointer