Questions about 555 Timers

Fall 2004

Question 1 -- Astable Multivibrator *(23 points)*

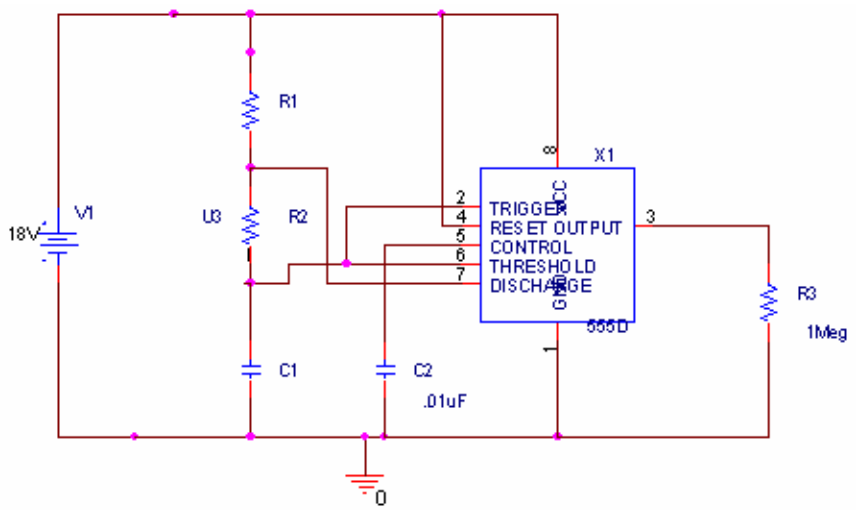

The circuit above has been simulated using PSpice. The output below shows traces from probes placed at pins 2,3,6 and 7.

a. Label which trace goes with which pin (2,3,6,7) in each time period. Be sure that you label the traces in both the on and off parts of the pulse cycle. *(8 points)*

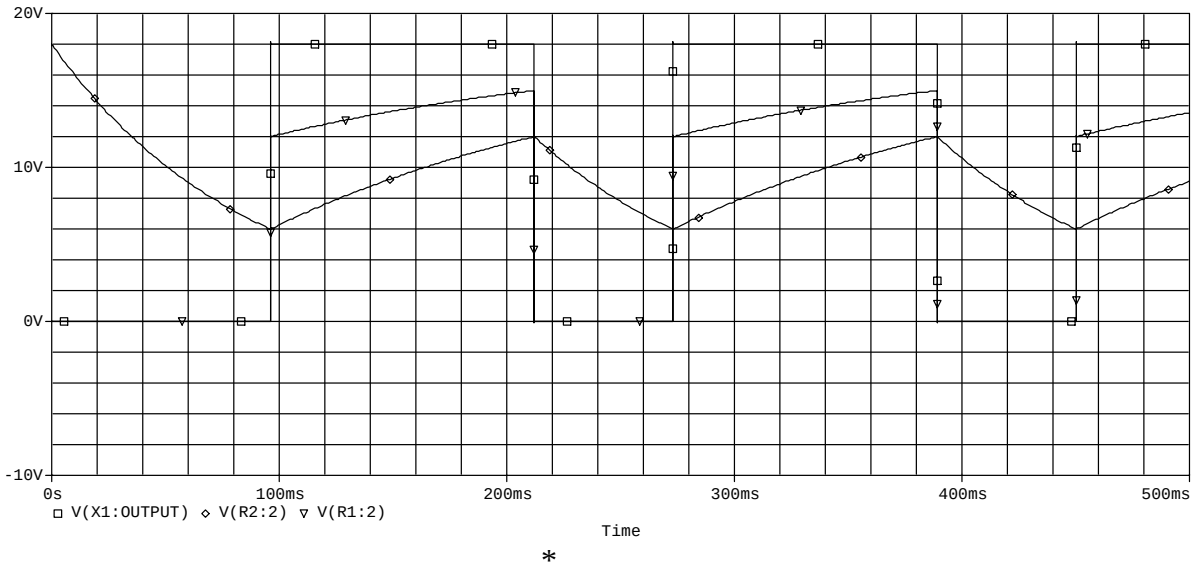

*

b. Derive an equation which relates the duty cycle of the output to the values of R1 and R2. Do not substitute in values for R1 and R2. *(3 points)*

c. Use the equation you found in b to determine the approximate duty cycle of this circuit when: *(6 points)*

R1>>R2

R1=R2

R1<<R2

d. Using the output shown, on the previous page, determine the duty cycle of this circuit. *(4 points)*

e. What values do R1 and C1 have to have in order to create this output, if R2 is 47K? *(4 points)*

Fall 2004 Solution

Question 1 -- Astable Multivibrator *(23 points)*

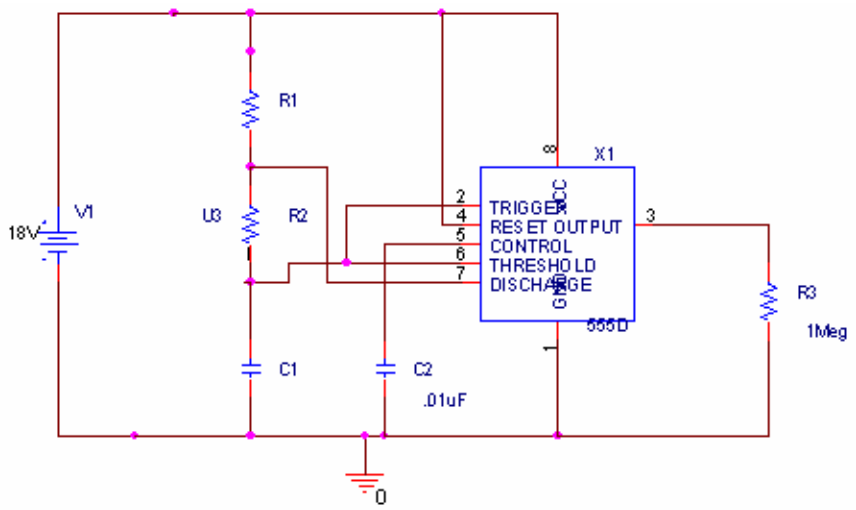

The circuit above has been simulated using PSpice. The output below shows traces from probes placed at pins 2,3,6 and 7.

a. Label which trace goes with which pin (2,3,6,7) in each time period. Be sure that you label the traces in both the on and off parts of the pulse cycle. *(8 points)*

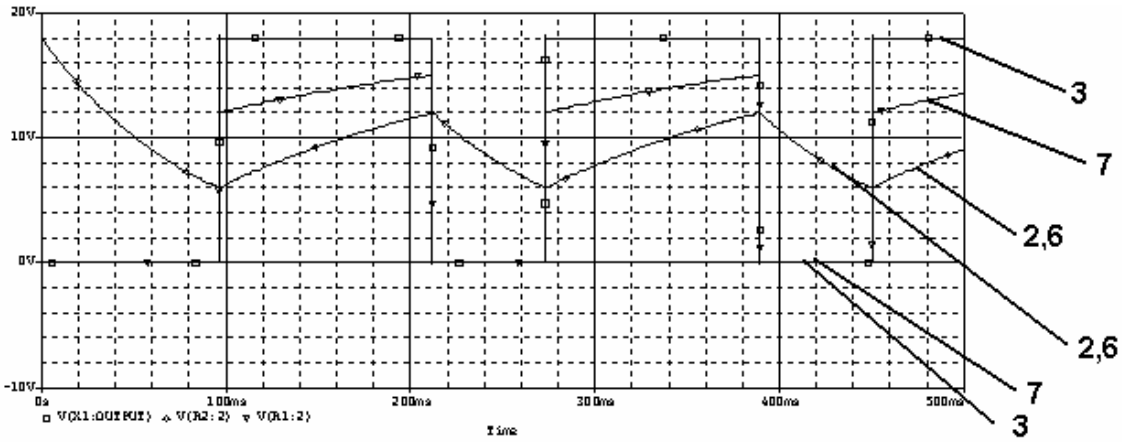

*

b. Find an equation which relates the duty cycle of the output to the values of R1 and R2. Do not substitute in values for R1 and R2. *(3 points)*

*DC = T1/T *100 = [0.693(R1+R2)C1]/[0.693(R1+2R2)C1] *100*

*DC = [R1+R2]/[R1+2R2]*100 = [(R1/R2) + 1]/ [(R1/R2) + 2]*100*

c. Use the equation you found in b to determine the approximate duty cycle of this circuit when: *(6 points)*

R1>>R2 $[(\infty/0)+1]/[(\infty/0)+2]*100 \approx 100\%$

R1=R2 $[1+1]/[1+2]*100 = 66.67\%$

R1<<R2 $[(0/\infty)+1]/[(0/\infty)+2]*100 \approx 50\%$

d. Using the output shown, on the previous page, determine the duty cycle of this circuit. *(4 points)*

T1=389m-273m=116ms T2=450m-389m=61ms

T = 116m+61m = 177ms

*D = (T1/T)*100 = 116m/177m *100 = 65.5%*

A-e. What values do R1 and C1 have to have in order to create this output, if R2 is 47K? *(4 points)*

T2 = 0.693(R2)(C1) 61m = .693(47K)C1 C1=1.9μF

T1 = 0.693(R1+R2)C1 116m = 0.693(R1+47K)(1.9μ) Note: m/μ = K
89.4K = R1+47K
R1 = 42K ohms

B-e. What values do R1 and C1 have to have in order to create this output, if R2 is 22K? *(4 points)*

T2 = 0.693(R2)(C1) 61m = .693(22K)C1 C1=4.0μF

T1 = 0.693(R1+R2)C1 116m = 0.693(R1+22K)(4μ) Note: m/μ = K
41.8K = R1+22K
R1 = 19.8K ohms

Spring 2004

3. 555 Timer Circuit (25 points)

a. Given the following 555 timer in Astable mode, where R1=50K, R2=10K and C1=0.001μF.

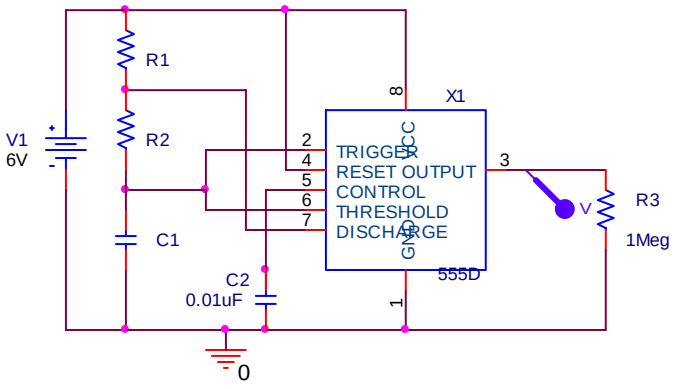

i) What is the value of

The on-time *(2 points)*

The frequency *(2 points)*

The duty cycle *(2 points)*

ii) List two ways you could change components in the above circuit to double the frequency of the output pulses. [No pots or variable resistors allowed.] Then, demonstrate mathematically that your component changes have had the desired effect.

Method 1 *(3 points):*

Method 2 *(3 points):*

b. We have placed a sinusoidal signal on pin 5 of the above circuit.

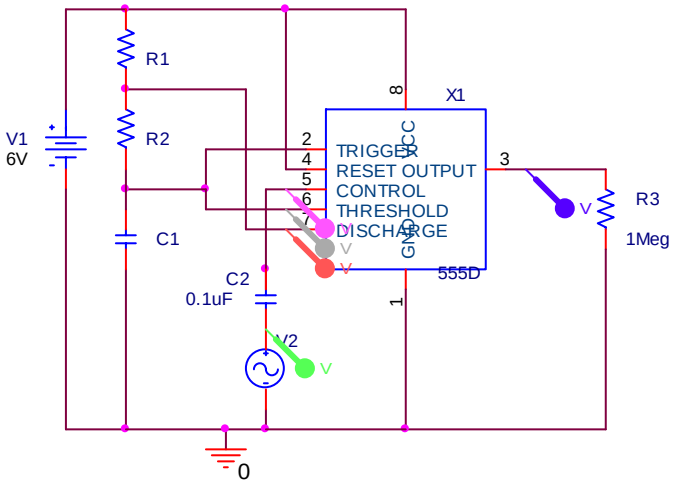

i) Identify the traces on the following plot which go with the output locations shown. (The input and pins 2,3,5, and 7 of the op amp.) *(2 points each) [Total 10 points]*

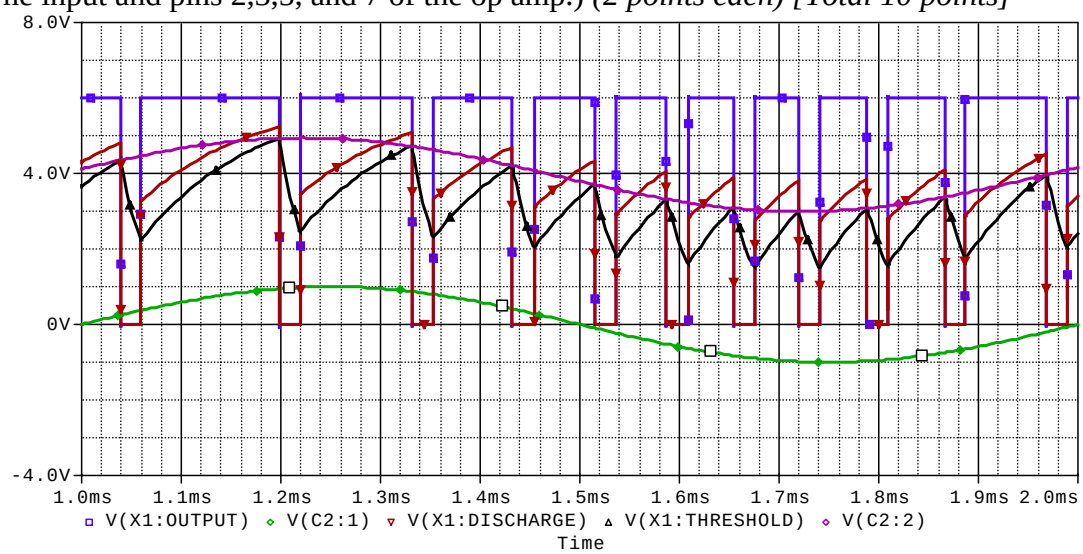

ii) Does the frequency of the output pulses increase or decrease as the input voltage increases? Why? *(3 points)*

Spring 2004 solution
3. 555 Timer Circuit (25 points)

(Answer to a for Test A)
a. Given the following 555 timer in Astable mode, where R1=50K, R2=10K and C1=0.001µF.

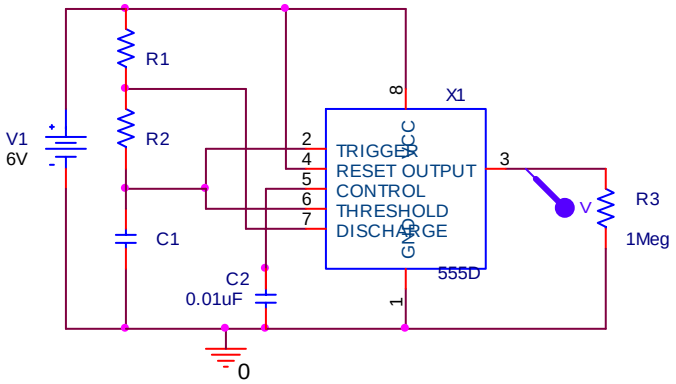

i) What is the value of

The on-time *(2 points)*

T1=0.693(R1+R2)C1=0.693(50E3+10E3)(1E-9)=41.58E-6

T1=41.6 µs

The frequency *(2 points)*

f=1.44/[(R1+2R2)(C1)]=1.44/[(50E3+20E3)(1E-9)]=0.020571E6

f=20571Hz

The duty cycle *(2 points)*

*D=(T1/T)x100 T=1/f=4.86E-5 D=(41.6E-6/4.86E-5)*100=.856x100*

D=86%

ii) List two ways you could change components in the above circuit to double the frequency of the output pulses. [No pots or variable resistors allowed.] Then, demonstrate mathematically that your component changes have had the desired effect.

f=20571Hz Double that is 41,143 Hz

Method 1 *(3 points):*
Half the size of C1 to 0.5 nF
f=1.44/[(R1+2R2)(C1)]=1.44/[(50E3+20E3)(5E-10)]=41,143 Hz

Method 2 *(3 points):*
Half the size of R1 and R2 R1=25K and R2=5K
f=1.44/[(R1+2R2)(C1)]=1.44/[(25E3+10E3)(1E-9)]=41,143 Hz

(Answers may vary)

(Answer to a for Test B)

a. Given the following 555 timer in Astable mode, where R1=30K, R2=5K and C1=0.001µF.

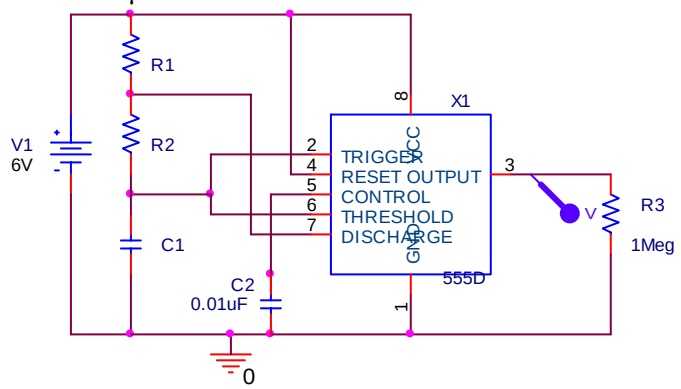

i) What is the value of

The on-time *(2 points)*

T1=0.693(R1+R2)C1=0.693(30E3+5E3)(1E-9)=41.58E-6

T1=24.255 µs

The frequency *(2 points)*

f=1.44/[(R1+2R2)(C1)]=1.44/[(30E3+10E3)(1E-9)]=36000

f=36,000Hz

The duty cycle *(2 points)*

*D=(T1/T)x100 T=1/f=2.778E-5 D=(24.255E-6/2.778E-5)*100=.873x100*

D=87.3%

ii) List two ways you could change components in the above circuit to double the frequency of the output pulses. [No pots or variable resistors allowed.] Then, demonstrate mathematically that your component changes have had the desired effect.

f=20571Hz Double that is 72,000 Hz

Method 1 *(3 points):*

Half the size of C1 to 0.5 nF

f=1.44/[(R1+2R2)(C1)]=1.44/[(30E3+10E3)(5E-10)]=72000 Hz

Method 2 *(3 points):*

Half the size of R1 and R2 R1=15K and R2=2.5K

f=1.44/[(R1+2R2)(C1)]=1.44/[(15E3+5E3)(1E-9)]=72000 Hz

(Answers may vary)

(Answer b for both tests)

b. We have placed a sinusoidal signal on pin 5 of the above circuit.

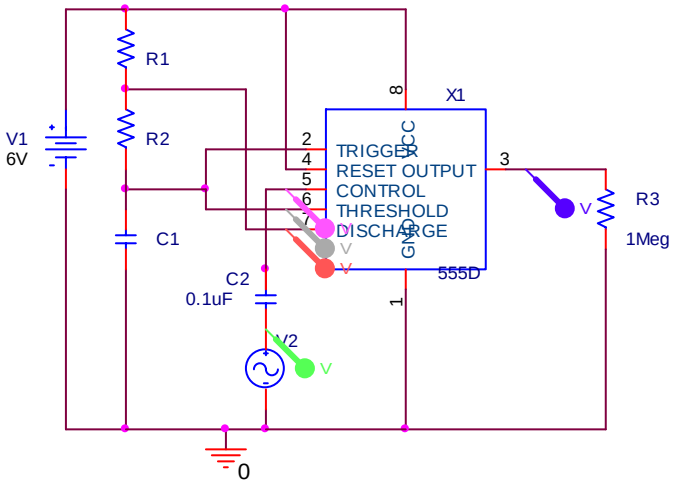

i) Identify the traces on the following plot which go with the output locations shown. (The input and pins 2,3,5, and 7 of the op amp.) *(2 points each) [Total 10 points]*

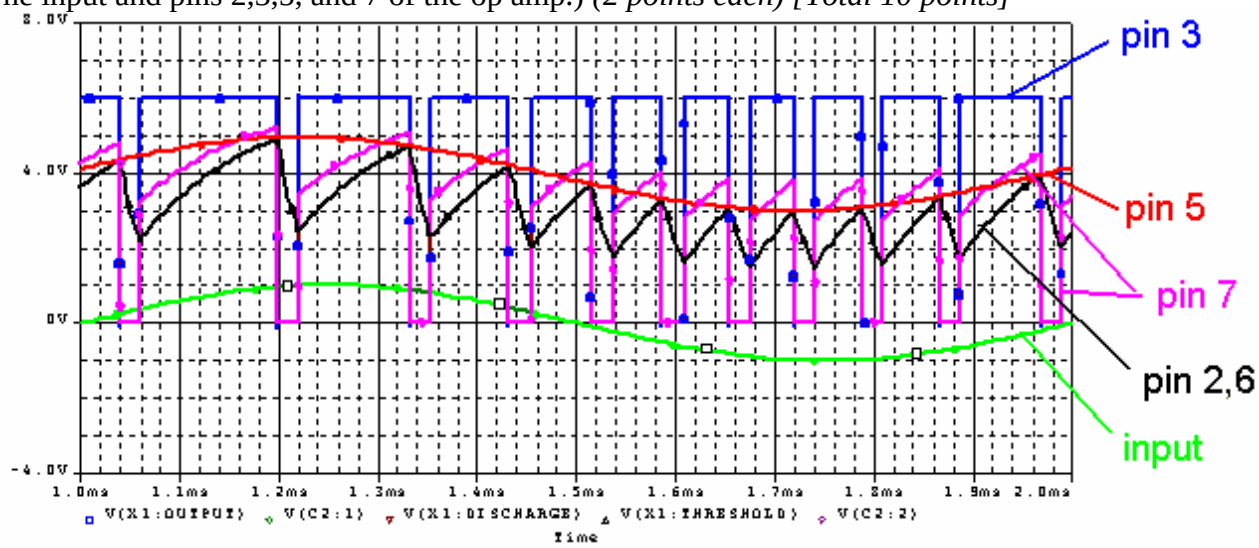

ii) Does the frequency of the output pulses increase or decrease as the input voltage increases? Why? *(3 points)*

The frequency of the output pulses decreases as the voltage level of the input increases. This is because the capacitor has to charge for a longer time to reach the voltage level (and subsequently discharge for a longer time). Since the length of the output pulses depends upon the charge time of the capacitor, when the voltage level is high, the pulses get longer. This corresponds to a decrease in frequency.

Fall 2003

Question 1 -- Astable Multivibrator

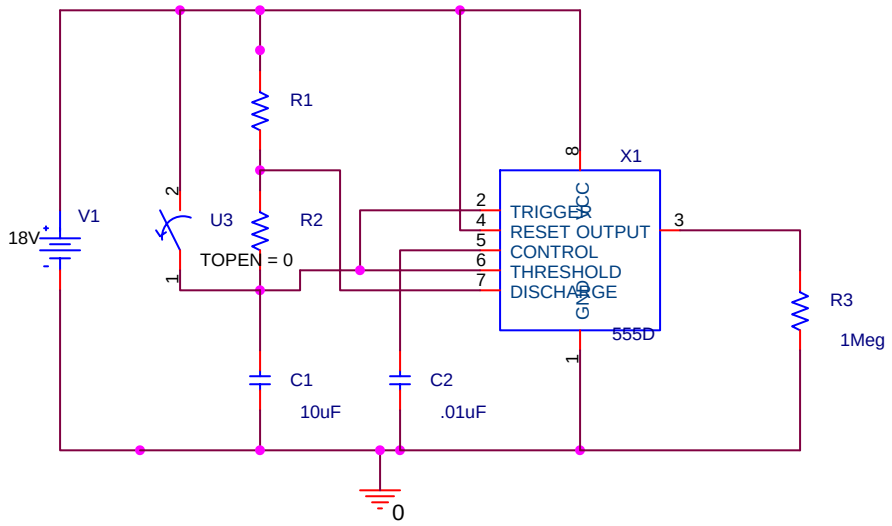

The circuit above has been simulated using PSpice. Using PROBE, the voltages at pins 2, 6, 7, and 3 have been displayed.

a. Label which trace goes with which pin (2,3,6,7) in each time period. Be sure that you label the traces in both the on and off parts of the pulse cycle. *(8 points)*

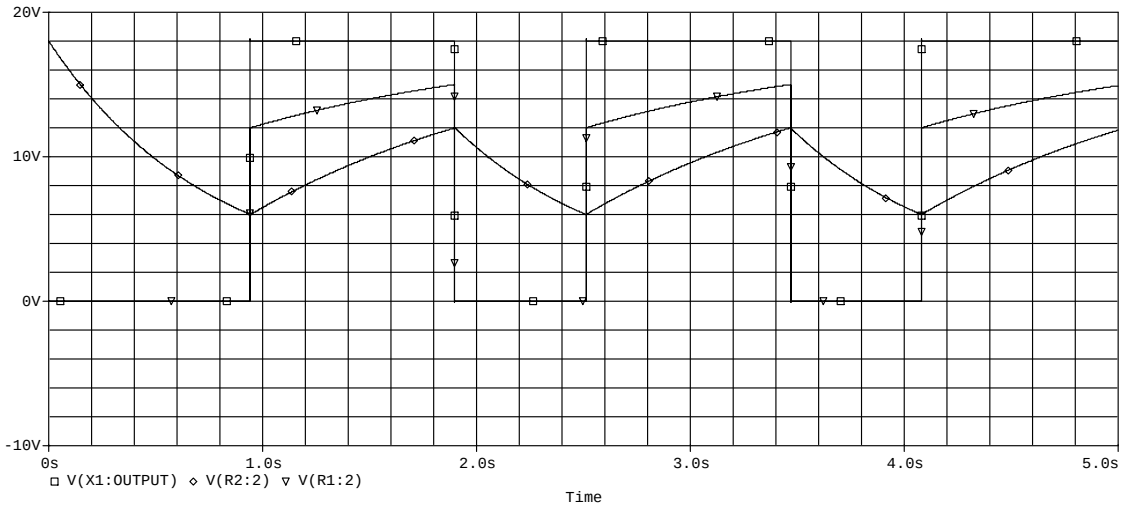

b. What if the duty cycle of the pulses in the plot? *(4 points)*

b. Determine the values of R1 and R2 from the information in this plot. *(4 points)*

c. What could you do to increase the duty cycle of the pulses? *(4 points)*

Fall 2003 Solution
Question 1 -- Astable Multivibrator

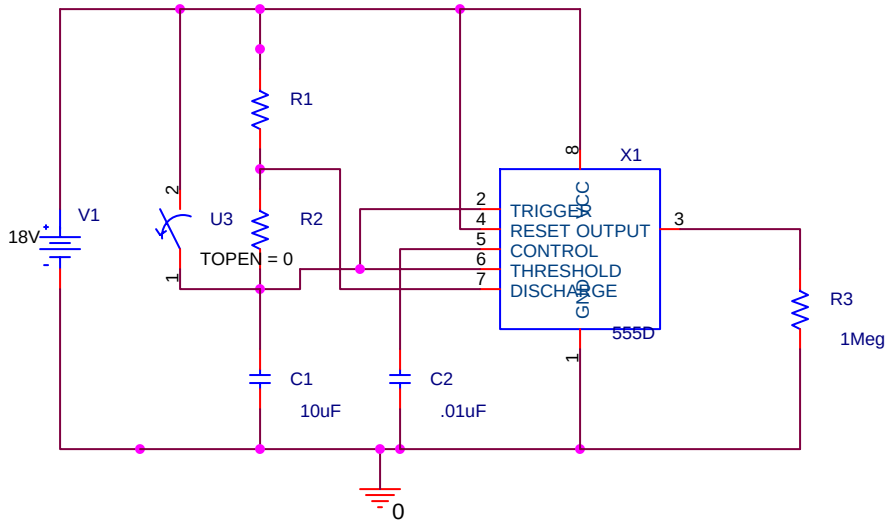

The circuit above has been simulated using PSpice. Using PROBE, the voltages at pins 2, 6, 7, and 3 have been displayed.

a. Label which trace goes with which pin (2,3,6,7) in each time period. Be sure that you label the traces in both the on and off parts of the pulse cycle. *(8 points)*

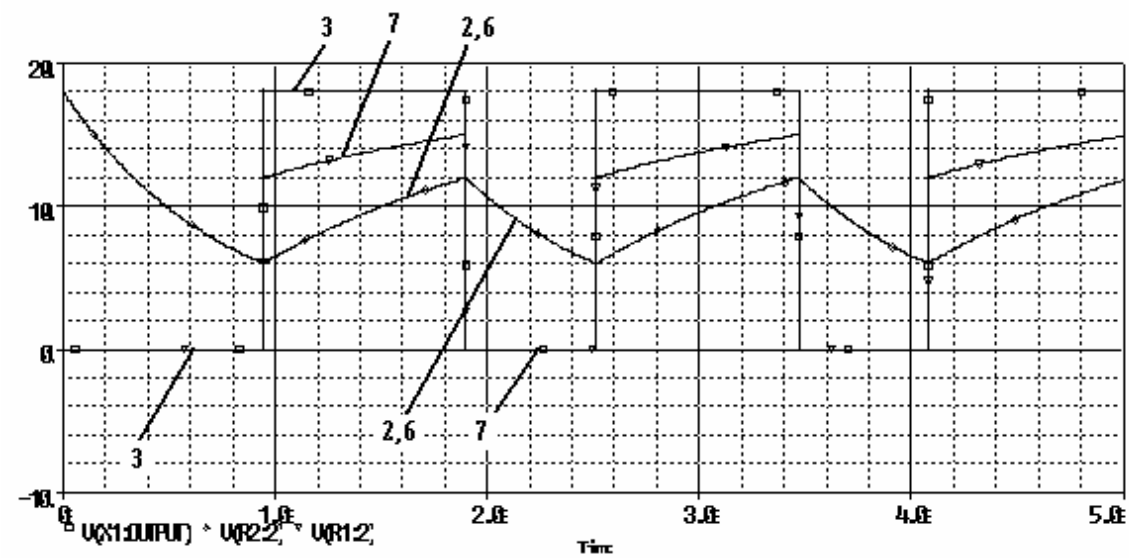

b. What is the duty cycle of the pulses in the plot? *(4 points)*

T1 = 0.96s T2=0.60s T=1.56s

duty cycle = T1/T = .615 ***duty cycle = 61.5% (answers may vary)***

b. Determine the values of R1 and R2 from the information in this plot. *(4 points)*

T2 = 0.693(R2)(C1) 0.6=0.693(R2)(10EE-6) R2=0.0866EE6 ***R2=86.6K ohms***

T1=0.693(R1+R2)(C1) 0.96=0.693(R1+86.6K)(10EE-6) R1+86.6K=138.5K

R1=51.9K ohms

c. Test A:What could you do to increase the duty cycle of the pulses? *(4 points)*
c. Test B:What could you do to decrease the duty cycle of the pulses? *(4 points)*

duty cycle = T1/T = [0.693(R1+R2)C1]=[0.693(R1+2R2)C1]=[R1+R2]/[R1+2R2]

$$duty\ cycle = \frac{\frac{R1}{R2}+1}{\frac{R1}{R2}+2}$$

If R1>>R2 then the duty cycle approaches 100% -- It increases. If R1<<R2 then the duty cycle approaches 50% -- It decreases. Changing the value of the capacitor will influence the frequency, but not the duty cycle.

Test A: increase R1 or decrease R2
Test B: increase R2 or decrease R1

Spring 2003

1) 555-Timer (20 pts)

You create the following circuit to control a motor with pulse width modulation:

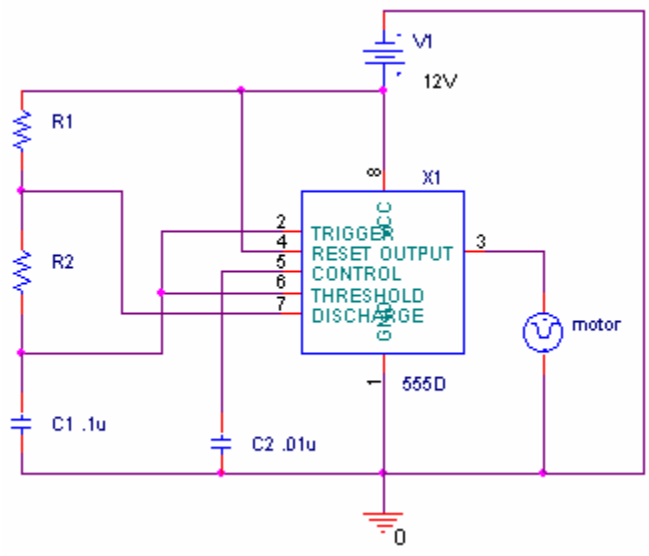

a) If R1=1K ohms and R2=3K ohms, what will be the duty cycle of the output at pin 3 (8 pts)?

b) If R1=3K ohms and R2=1K ohms, what will be the duty cycle of the output at pin 3 (8 pts)?

c) Which of the scenarios above (a or b) will cause the motor to spin faster? Why? (4 pts)

Spring 2003 solution
1) 555-Timer (20 pts)

You create the following circuit to control a motor with pulse width modulation:

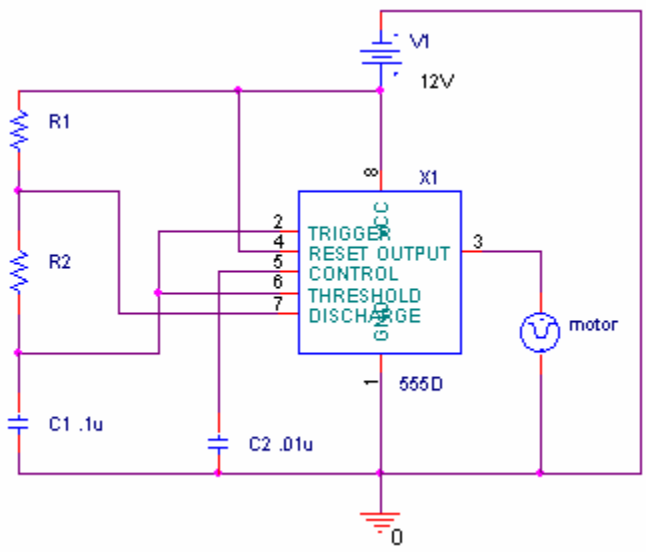

a) If R1=1K ohms and R2=3K ohms, what will be the duty cycle of the output at pin 3 (8 pts)?

DC = T1/(T1+T2) = 0.693(R1+R2)(C1)/0.693(R1+2R2)(C1)
= (R1+R2)/(R1+2R2)
= [(R1/R2)+1] / [(R1/R2)+2]

(R1/R2) = 1K/3K=1/3 DC = 1.333/2.333 = .57 ***Duty Cycle = 57%***

b) If R1=3K ohms and R2=1K ohms, what will be the duty cycle of the output at pin 3 (8 pts)?

(R1/R2) = 3K/1K = 3 DC = 4/5 = .8 ***Duty Cycle = 80%***

c) Which of the scenarios above (a or b) will cause the motor to spin faster? Why? (4 pts)

b will spin faster because the time it is on relative to the time it is off is greater.

Fall 2002

1. 555 Timer (20 points)

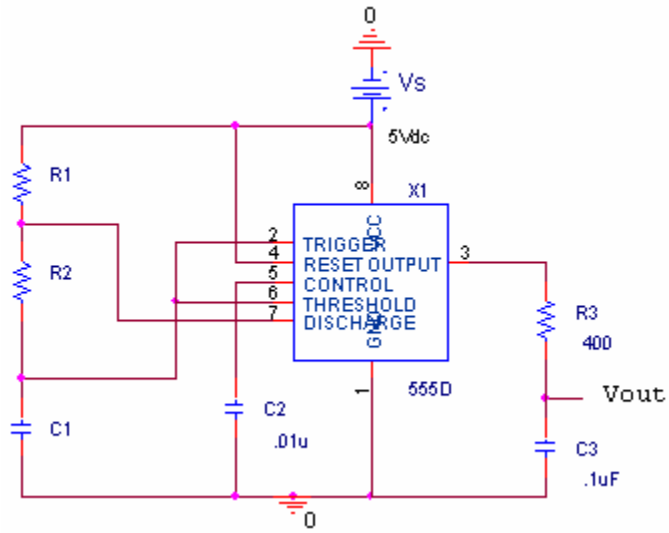

Figure 1: 555 Timer Circuit

For the 555 timer circuit in Figure 1, find the following values for R1 = 1K, R2 = 2K, C1 = 0.1uF. Show all work.

a) (4 points) T1:

b) (4 points) T2:

c) (4 points) Duty cycle:

d) (4 points) Frequency:

In project 2 we connected the audio input through a capacitor to the control voltage pin (i.e., pin 5). Just as in project 2, we now remove C2 and connect a signal source through a capacitor to pin 5. We denote the control voltage V_{CTL}. The upper threshold then becomes $2V_S/3 + V_{CTL}$.

e) As V_{CTL} increases, does the charge time increase, decrease or stay the same? Why? (3 points)

f) As V_{CTL} decreases, does the frequency of the pulses output from pin 3 increase, decrease, or stay the same? Why? (3 points)

Extra Credit (1 point) : Using your knowledge of RC circuits and assuming the capacitor is discharged at time 0, circle the plot corresponding to the shape of Vout.

i)

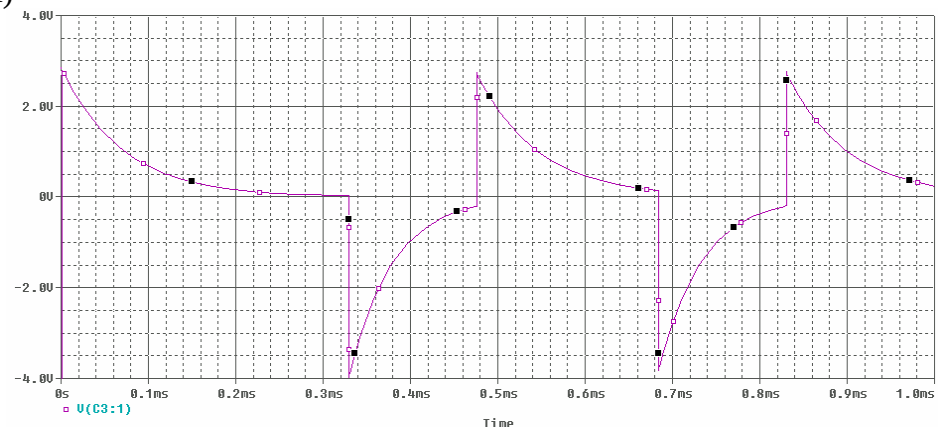

ii)

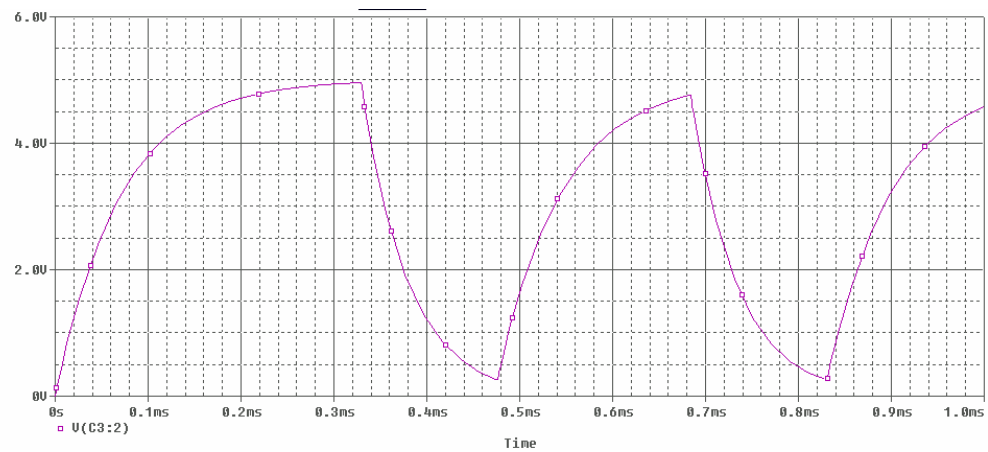

iii)

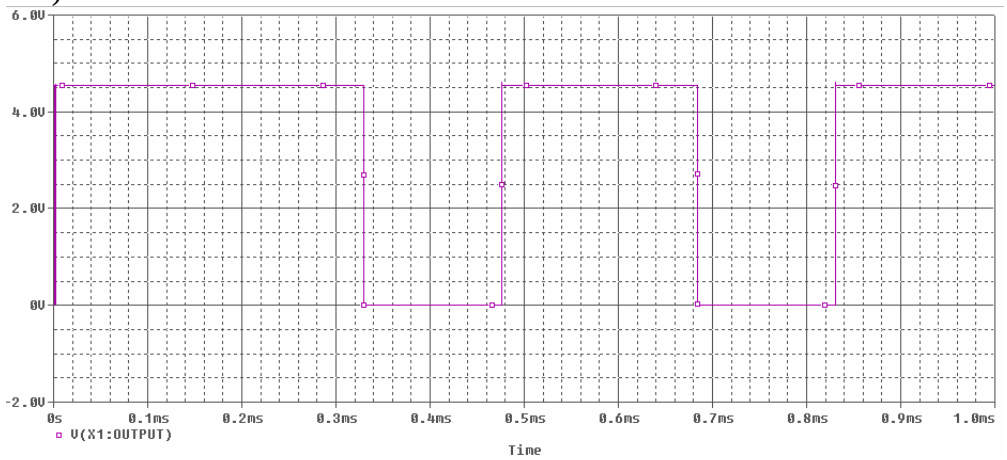

Fall 2002 Solution
(not available)

Spring 2002

1) 555 Timer (20pts)

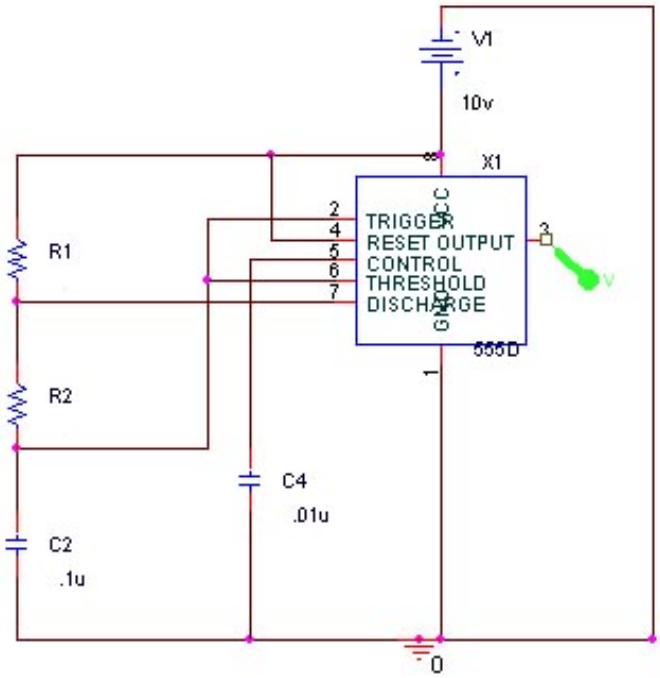

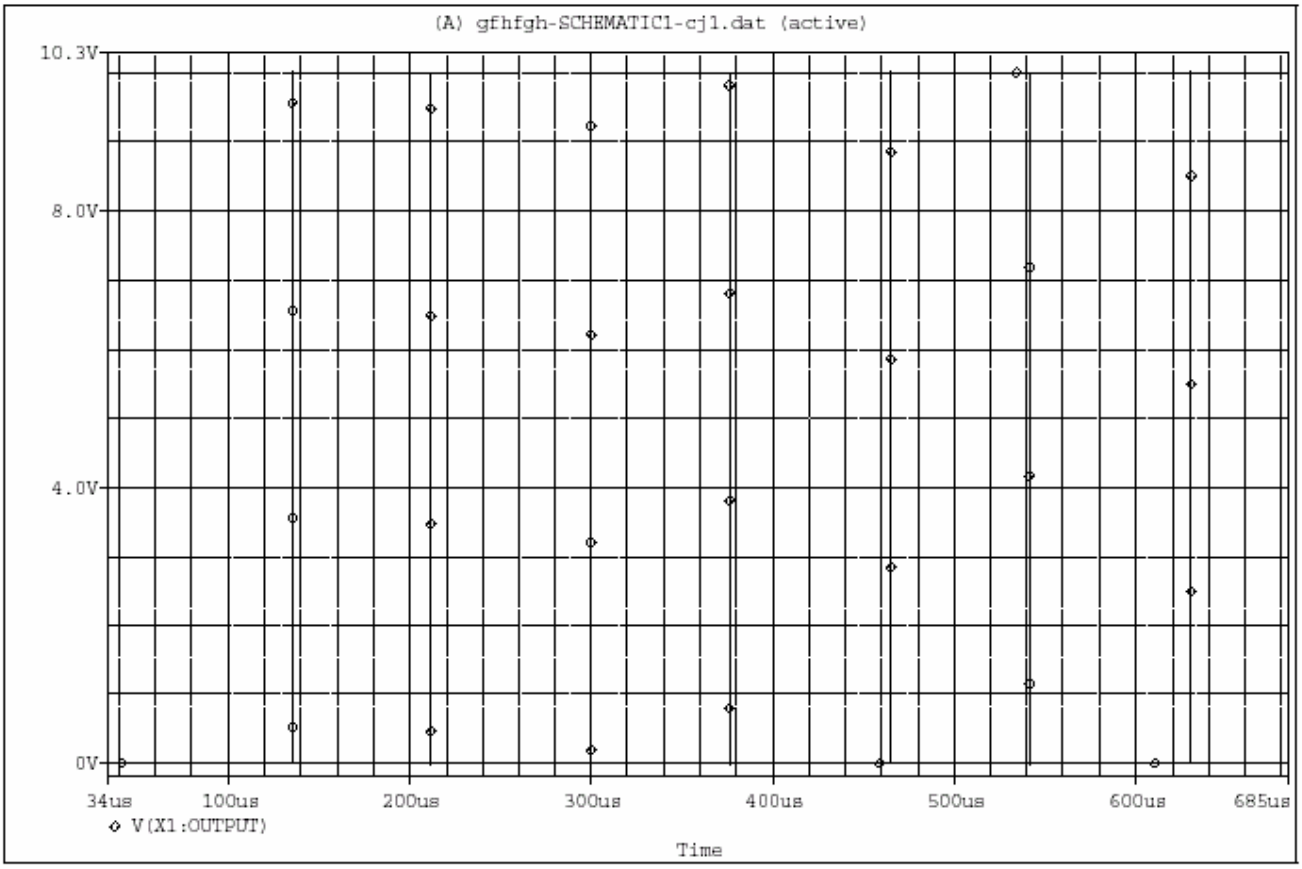

a) What is the Frequency of the 555 set at, What is T1, T2? 9pts

b) Calculate R1, R2 8pts

c) What are the two voltage thresholds at which the 555 switches? 3pts

Spring 2002 solution
1) 555 Timer (20pts)

a) What is the Frequency of the 555 set at, What is T1, T2? 9pts

From plot: Period = (455us-300us) = 155us
Frequency = 1/period = .00645 MHz
Frequency = 6.5 KHz
From plot: T1 = 378us-300us
T1 = 78us
From plot: T2 = 455us - 378us
T2 = 77 us

b) Calculate R1, R2 8pts

T2 = 0.693(R2)(C2) = 0.693(R2)(0.1u) = 77u
R2 = 1111.1 ohms
T1 = 0.693(R1+R2)(C2) = 0.693(R1+1111.1)(0.1u) = 78u
R1 = 14.4 ohms

c) What are the two voltage thresholds at which the 555 switches? 3pts

From the circuit: The input voltage is 10 volts.
The 555 should switch at on at 1/3 Vcc and off at 2/3 Vcc.
Switch off at: 6.67 Volts
Switch on at: 3.33 Volts

Fall 2001 Solution

EI TEST 3A Fall 2001 **Name** Solution **Sect** 1

Please show all work on all questions for full credit, some explanation of your answer is required.

1 555 Timer Astable Multivibrator (20 points)

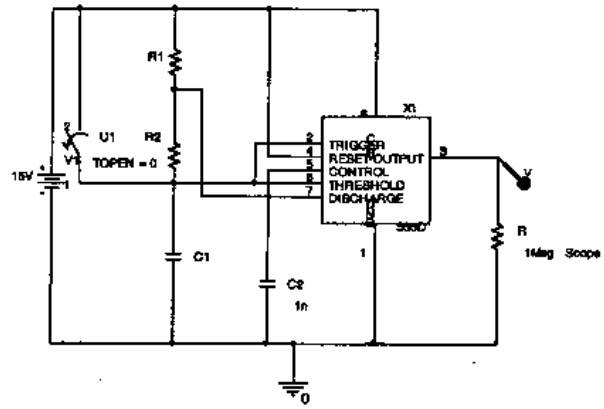

a) Design an astable multivibrator, as shown above, using R1, R2, and C1. The output should have a frequency of 5000 Hz, and a duty cycle of 60%. Show all work. (NOTE: It may be nessesary to carry out calculations to the hundredths or thousandths decimal to be accurate) (15 pts) $f = 5000\,Hz \Rightarrow T = 200\,\mu Sec$

Duty cycle $= 0.6 \Rightarrow T_1 = 0.6T \Rightarrow T_1 = 120\,\mu Sec \Rightarrow T_2 = 80\,\mu Sec$

$T_2 = 0.693\, R_2 C_1$ $\boxed{\text{Assume } C_1 = 1\mu F}$

$\Rightarrow R_2 = \frac{T_2}{0.693\, C_1} \Rightarrow \boxed{R_2 = 115\,\Omega}$

$T_1 = 0.693(R_1 + R_2)C_1 \Rightarrow R_1 = \frac{T_1}{0.693\, C_1} - R_2 \approx 58\,\Omega \Rightarrow \boxed{R_1 = 58\,\Omega}$

* The solution to this question is not unique.

b) To scale, draw your 555 output, including values on the X axis (time) for rises and falls of the pulse ie. T1 and T2. Also indicate the amplitudes on the Y axis (volts) (5 pts)

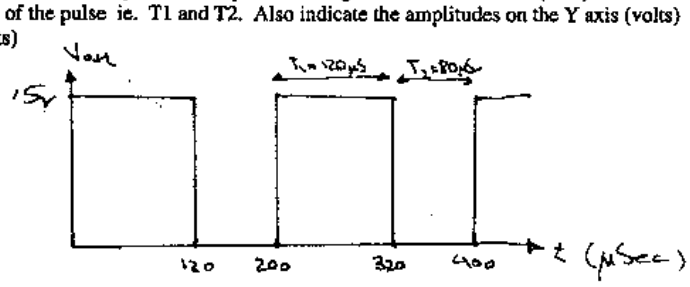

Fall 2000

1. **Astable Multivibrator**

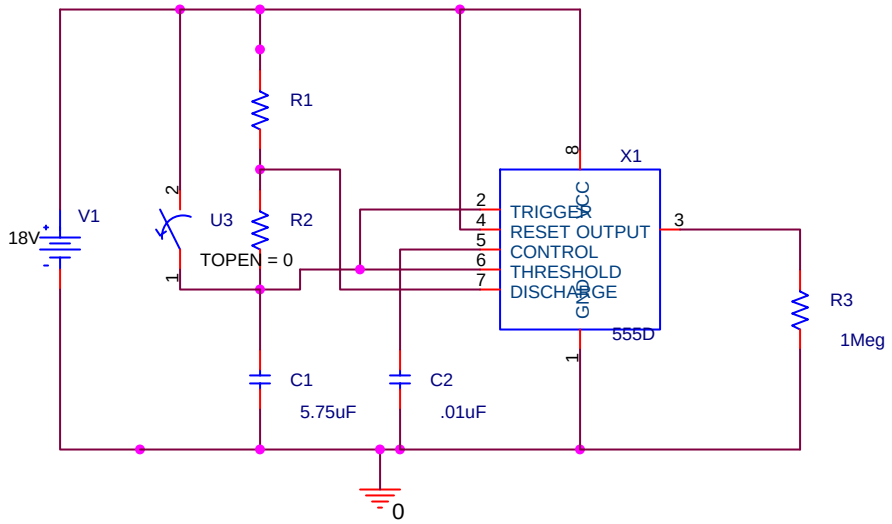

The circuit above has been simulated using PSpice. Using PROBE, the voltages at pins 2, 6, 7, and 3 have been displayed. Determine the values of resistors R1 and R2 from the information in this plot. Also, label which trace goes with which pin in each time period. Be sure that you label the traces in both the on and off parts of the pulse cylce.