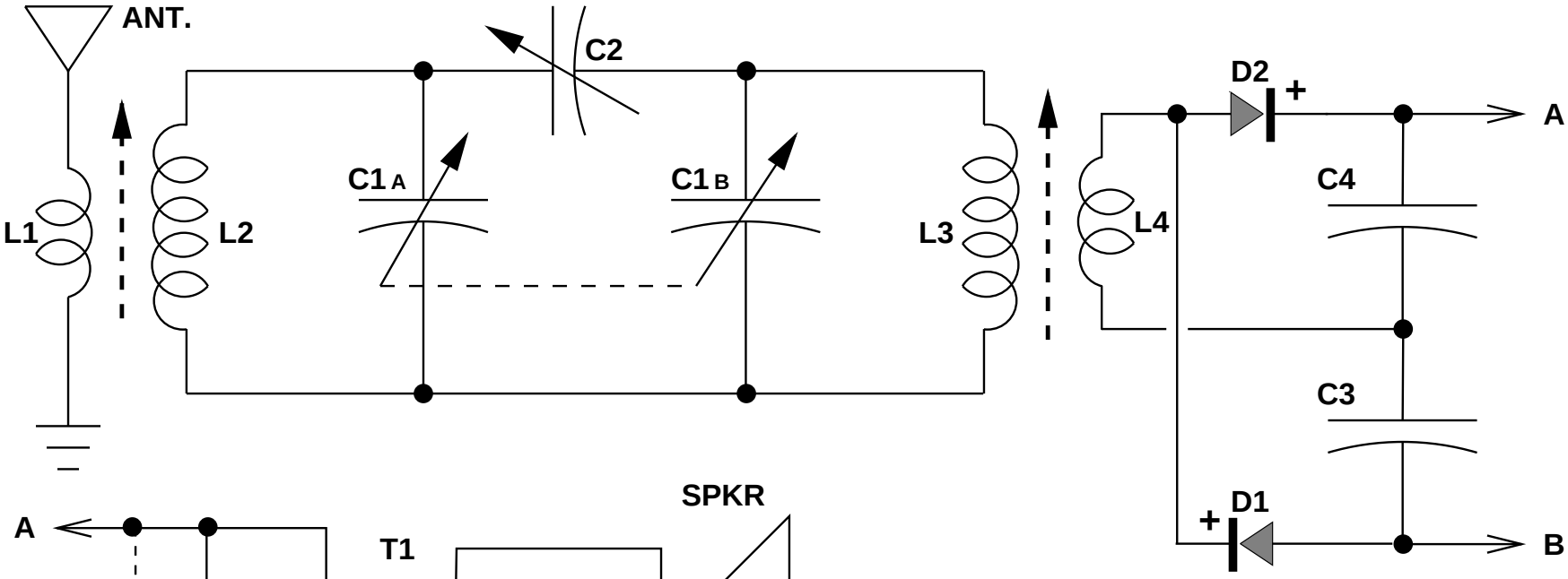

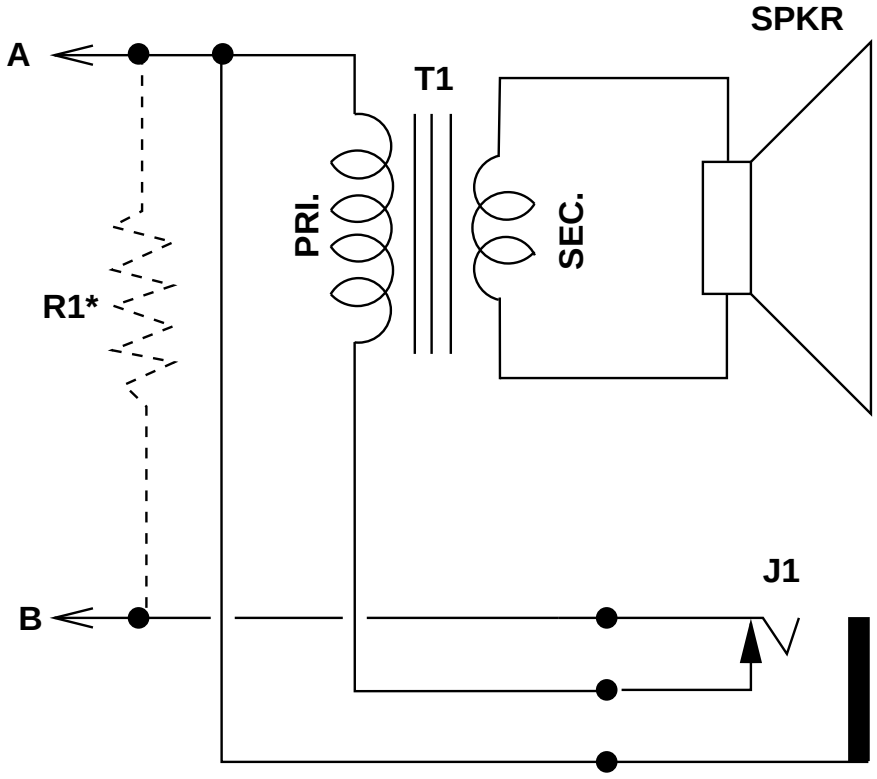

PARTS LIST

C1a/C1b-- 2-gang, 365-uuf. variable capacitor (Lafayette MS-142 or equivalant)
C2-- 180-uuf. compression-type trimmer capacitor
C3, C4-- .005-uf. fixed capacitor
D1, D2-- 1N34A diode
J1-- Closed-circuit phone jack
L1, L4-- 22 turns of No. 24 cotton-covered wire (see text)
L2, L3-- Ferrite antenna coil (Miller 6300 or equivalent)
R1-- 47,000 ohm, 1/2 watt resistor (*optional, see text)
T1-- Replacement-type output transformer; 3000- to 10,000-ohm primary; 4-ohm secondary
Spkr.-- 2 1/2" speaker, 4-ohm voice coil (Lafayette SK-65 or equivalent)
Misc.-- Hardware, wood, sheet aluminum, Fahnestock clips, etc.

High Power Crystal Set by Walter B. Ford
Redrawn from the April 1960 issue of Popular Electronics
http://hibp.ecse.rpi.edu/~john/xtal.html
Reproduced without permission because nobody there could give me a Yea or Nay